TECHBRITE

SAVING ENERGY IN THE BEST POSSIBLE LIGHT

PROJECT NAME:	
NOTES:	
PART NUMBER:	
DATE:	

LED LOW PROFILE CANOPY FIXTURE

PRODUCT DESCRIPTION:

This fixture is the perfect solution to update any outdoor application. TechBrite's LED Low Profile Canopy light has a high quality powder coated finish able to withstand the harshest environments. TechBrite's Canopy Outdoor Fixture is perfect for parking lots, parking garages, entrances, walkways and any other area where increased light is needed for safety or functionality.

FEATURES:

- Lightweight cast aluminum cooling fins
- Wet location
- High efficiency LED driver > 90%
- Lightweight for easy installation
- CRI 70
- Polycarbonate heat resistant lens
- Limited warranty: 5 years on luminaire

PERFORMANCE SPECIFICATION:

Lumens	3800 / 5450 / 8000
Watts	27 / 40 / 60
LPW	141 / 136 / 133
Color	5000
CRI	70
L70	L70 @ > 50,000 hrs
L85	N/A
Max Ambient Temp	113° F
Min Ambient Temp	-40° F
Dimming	0-10v Optional
Driver Voltage	120/277
Chip	Lumileds 3030
Driver	Mester

LED Low Profile Canopy Fixture

Commercial/Industrial

DIMENSIONS:

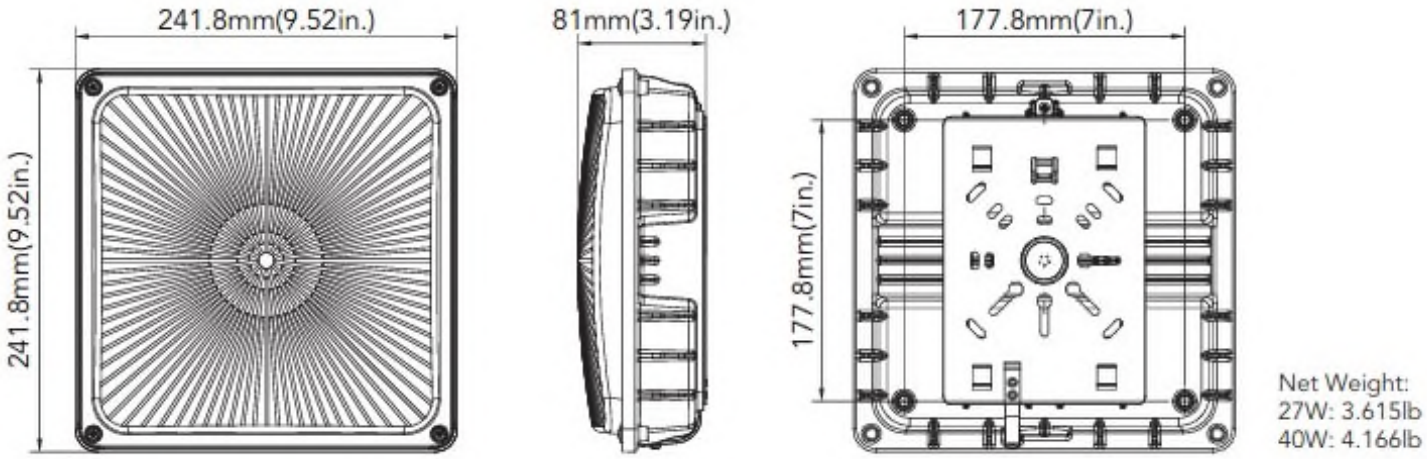

FREQUENTLY ORDERED PART NUMBERS:

Part Number	Lumens	Watts	LPW	Color	Description	Dimensions	Weight
TB-CP0527W27V50KD	3800	27	141	5000	LED Canopy Outdoor Fixture	9.5 x 9.52 x 3.19 (in)	3.62 (lbs)
TB-CP0540W27V50KD	5450	40	111	5000	LED Canopy Outdoor Fixture	9.5 x 9.52 x 3.19 (in)	4.16 (lbs)
TB-CP0560W27V50KD	8000	60	133	5000	LED Canopy Outdoor Fixture	9.5 x 9.52 x 3.19 (in)	4.63 (lbs)
TB-CP0527W27V50KDD	3800	27	141	5000	LED Canopy Outdoor Fixture - Dimming	9.5 x 9.52 x 3.19 (in)	3.62 (lbs)
TB-CP0540W27V50KDD	5450	40	111	5000	LED Canopy Outdoor Fixture - Dimming	9.5 x 9.52 x 3.19 (in)	4.16 (lbs)
TB-CP0560W27V50KDD	8000	60	133	5000	LED Canopy Outdoor Fixture - Dimming	9.5 x 9.52 x 3.19 (in)	4.63 (lbs)